Vue de dessus

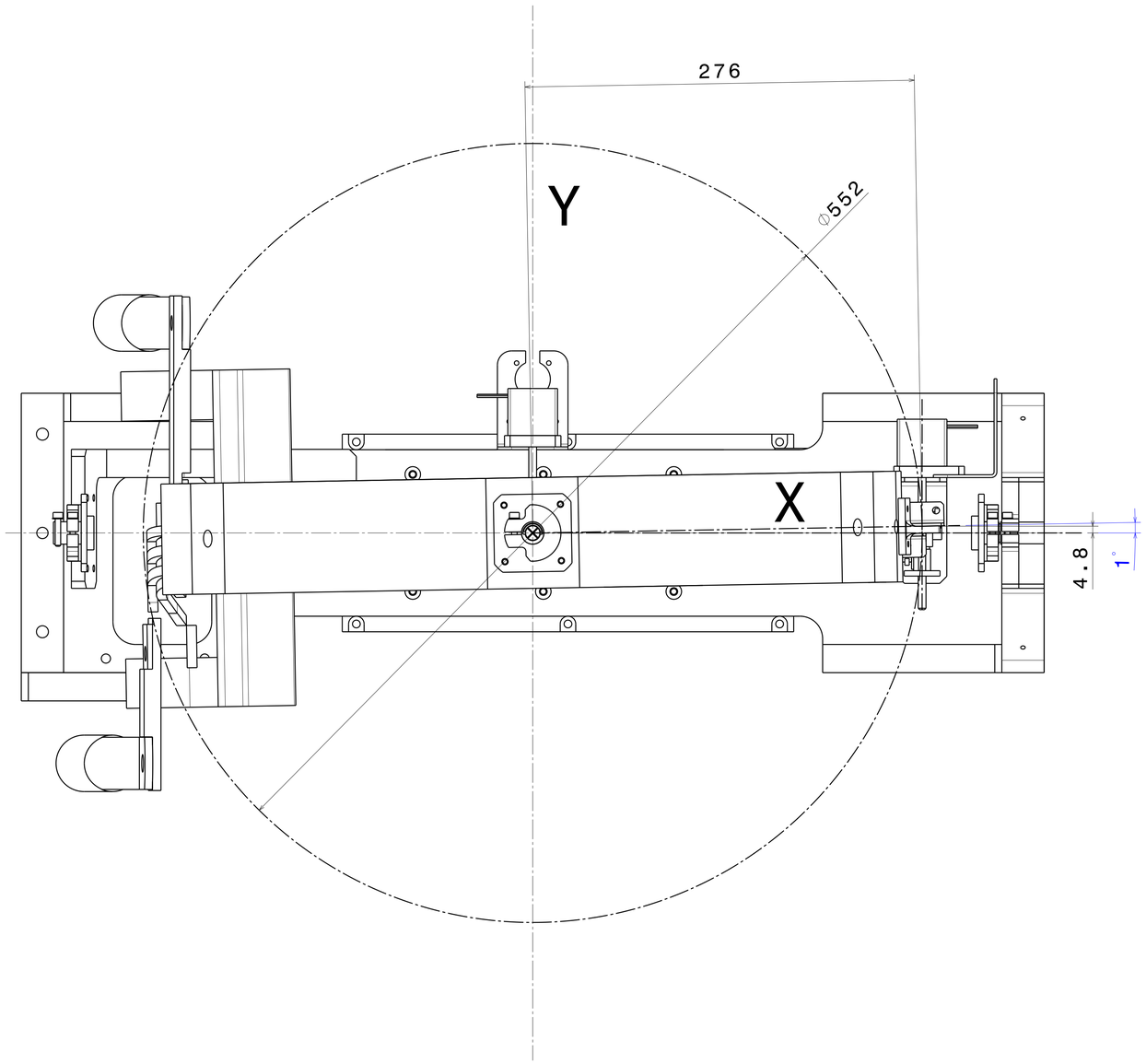

Vue de coté

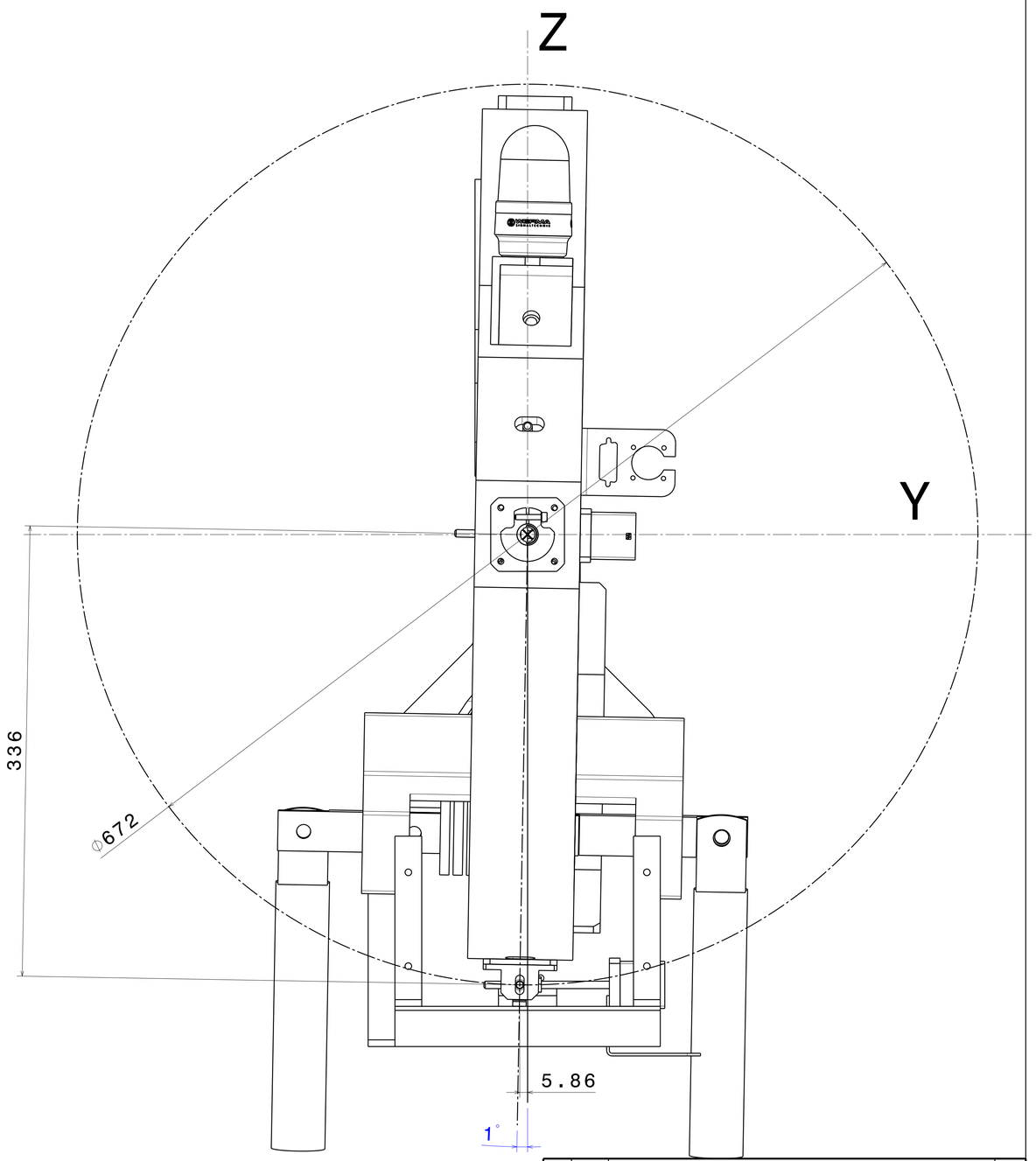

Ind	Date	Modification	By

ID Smarteam : DRW62477 | Part/Product ID Smarteam : PRD58293

LINAC

Ensemble solénoïde motorisé

Dimensions

Gen. Tol.:	ISO 8015 ISO 2768 Class mK	Surface finish ISO 1302	Ra: 3,2
Material:		Mass:	... kg
Treatment:			
Drawn by	DA		03/02/21
Checked by	...		../../10
Approved by	...		../../10

LABORATOIRE DE L'ACCELERATEUR LINEAIRE
Bat. 208, BP 34, 91898 ORSAY CEDEX FRANCE
Tel. 01 64 46 83 63 - Fax 01 64 46 83 47

Scale 1/2 | PLAN POUR INFORMATION | Index A

Communication or reproduction of this document, under any form, or any direct or indirect use of its content for production or other purposes is illegal without prior written authorization by its owner : the Centre National de la Recherche Scientifique. All rights reserved for patent or model application.